# Cyclotron & N-Filter
# GB I Protonpack
# Revison 0.97
# Sheet 3

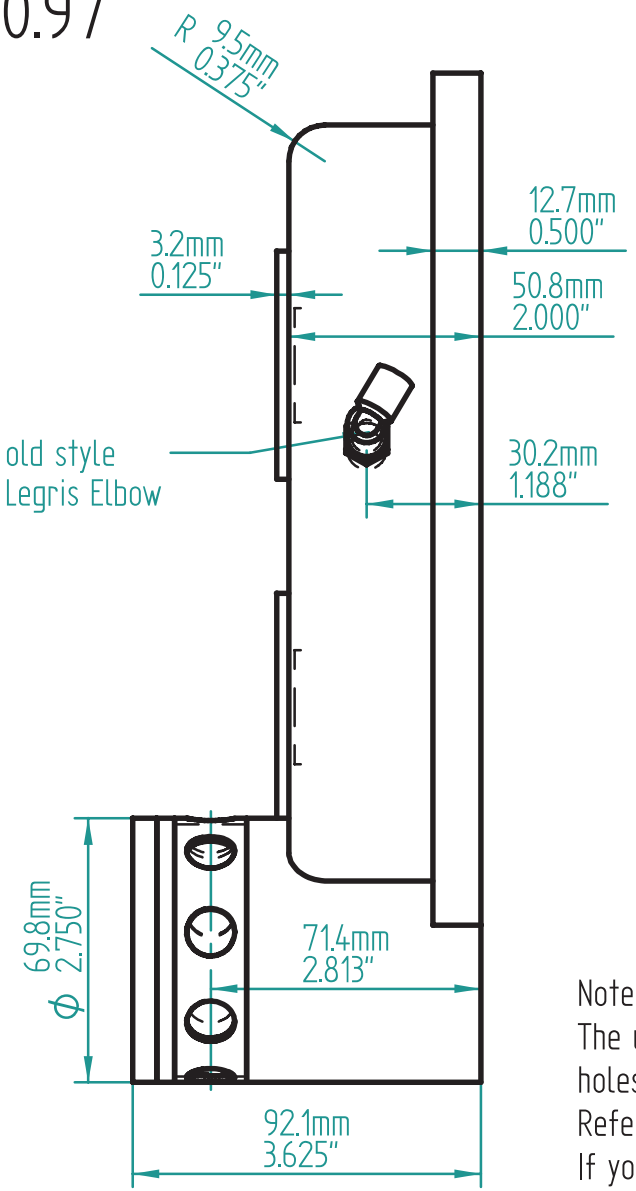


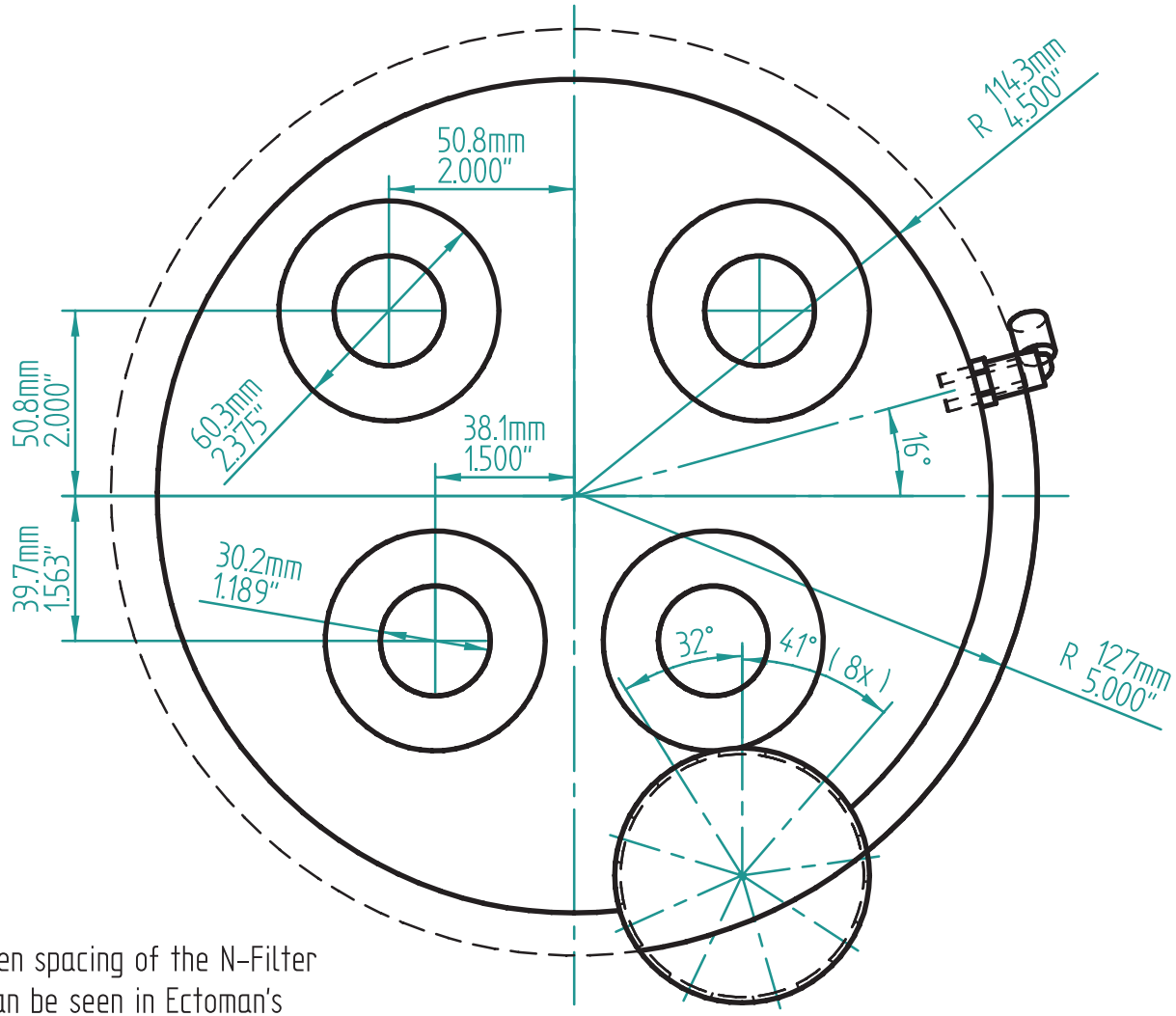


Note:
The unven spacing of the N-Filter holes can be seen in Ectoman's Reference pictures #15 and #38.
If you prefer an even spacing, simply use 9x 40°.